Econ 702 Macroeconomics I

Charles Engel and Menzie Chinn

Spring 2020

Lecture 23: Monetary Policy

Outline

- Recap: Why we prefer monetary policy
- Discuss formally monetary policy with Taylor rule imbedded New Keynesian model
- Empirical estimation of real rate

Recap

Policy Exogeneity?

- In our expositions, we have treated fiscal policy and monetary policy as being conducted in a vacuum
- That is, we treat government spending and money supply changes as exogenously determined
- Let's take a look at the real world conduct of monetary policy as summarized by the policy rate – in the US the Fed funds rate

We Move Interest Rates Instead of Money Supply to Hit Full Employment Output

$$\frac{M_t}{P_t} = M^d(r_t^f + \pi_{t+1}^e, Y_t^f) \tag{27.10}$$

By choosing M in order to make (27.10) hold

Fiscal or Monetary Preferred?

- Fiscal affects the natural rate
- Monetary does not
- Fiscal has long inside lag (proposal, legislation, implementation)
- But monetary has a long outside lag (interest rates affect investment, consumption)

Example Why Monetary to Be Preferred

Keeping output constant by reducing G in face of positive IS shock results in $r_{2,t} < r^f_{1,t}$ => Changes composition of output at $Y = Y^f$

Figure 27.12: Using Fiscal Policy to Combat an IS Shock

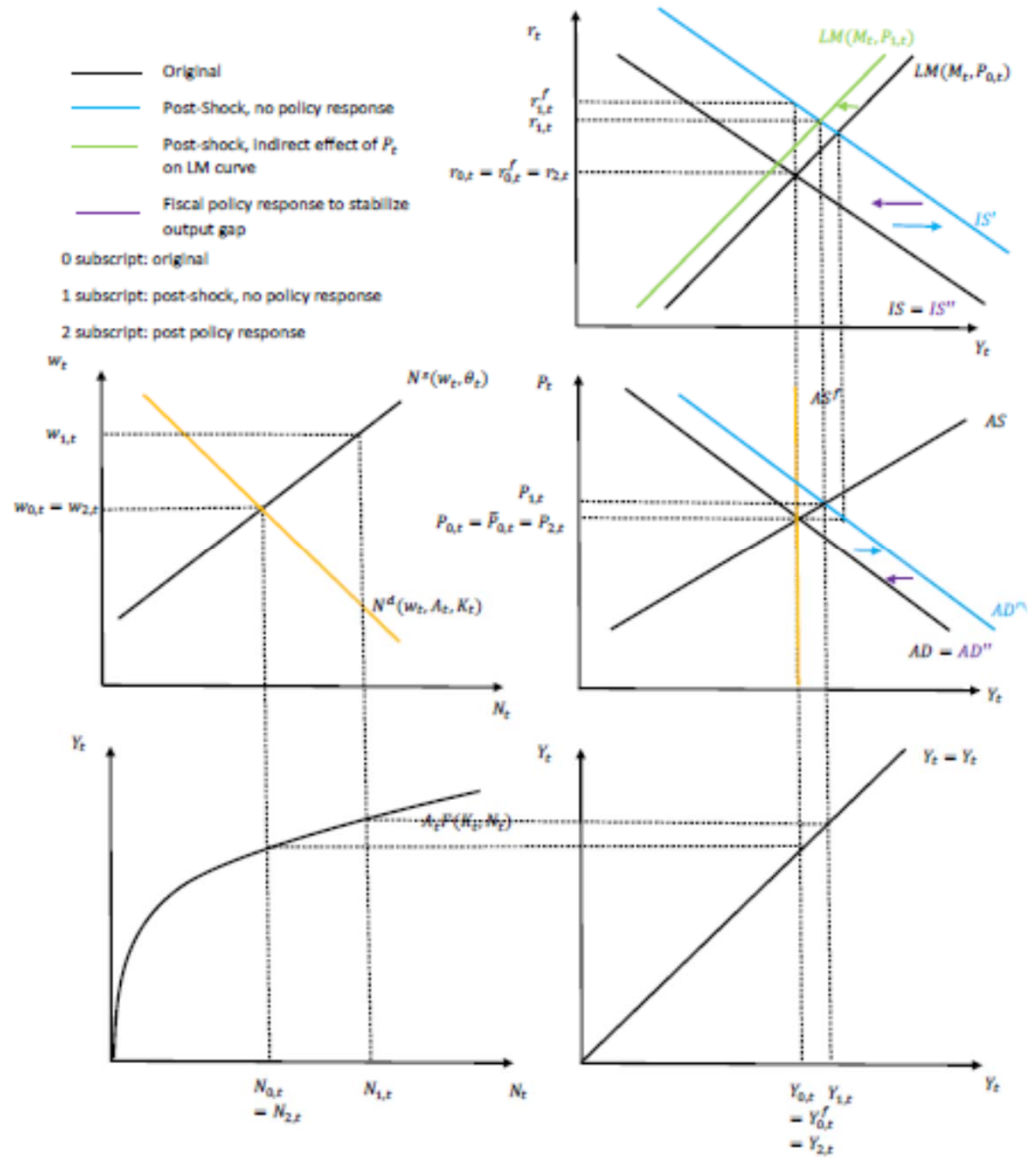

Implementation: Taylor Rules (Taylor, 1993)

$$i_t = r^* + \pi^* + \phi_\pi(\pi_t - \pi^*) + \phi_y(Y_t - Y_t^f) \qquad (27.11)$$

Textbook uses some standard assumptions

- r^* (assumed) at 2.5%
- π^* at 2%
- $\phi\pi = 1.5$
- $\phi y = 0.5$

Figure 27.13: Actual and Monetary Policy Rule Implied Fed Funds Rate

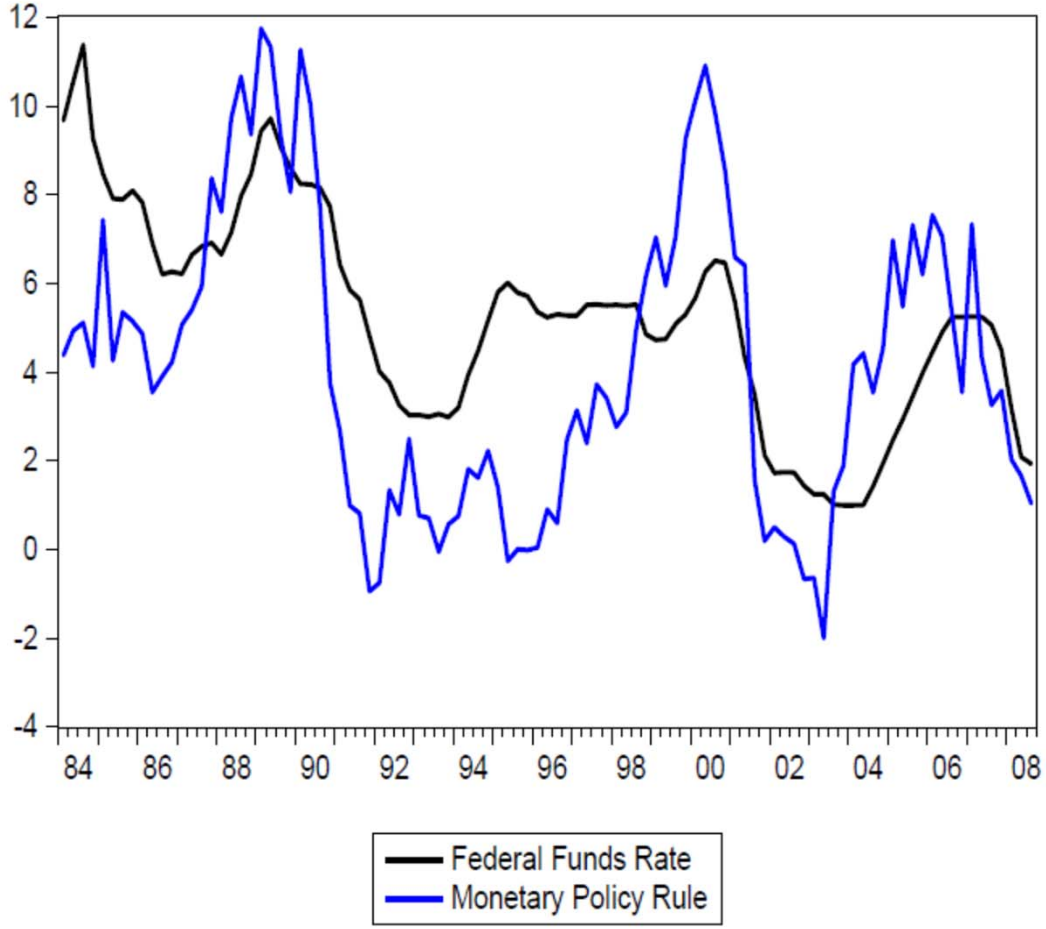

In Reality, Central Banks "Smooth"

- One can add an autoregressive feature, letting current policy rate depend on lagged policy rate in eqn (27.11)
- This will produce a better fit to the actual data
- Show this using Atlanta Fed Taylor Rule app https://www.frbatlanta.org/cqer/research/taylor-rule

- Alt 1: Eqn 27.11 except r* = 2%
- Alt 2:Eqn 27.11, but w/smoothing parameter = 0.85
- Alt 3: Eqn 27.11, except r* *estimated*

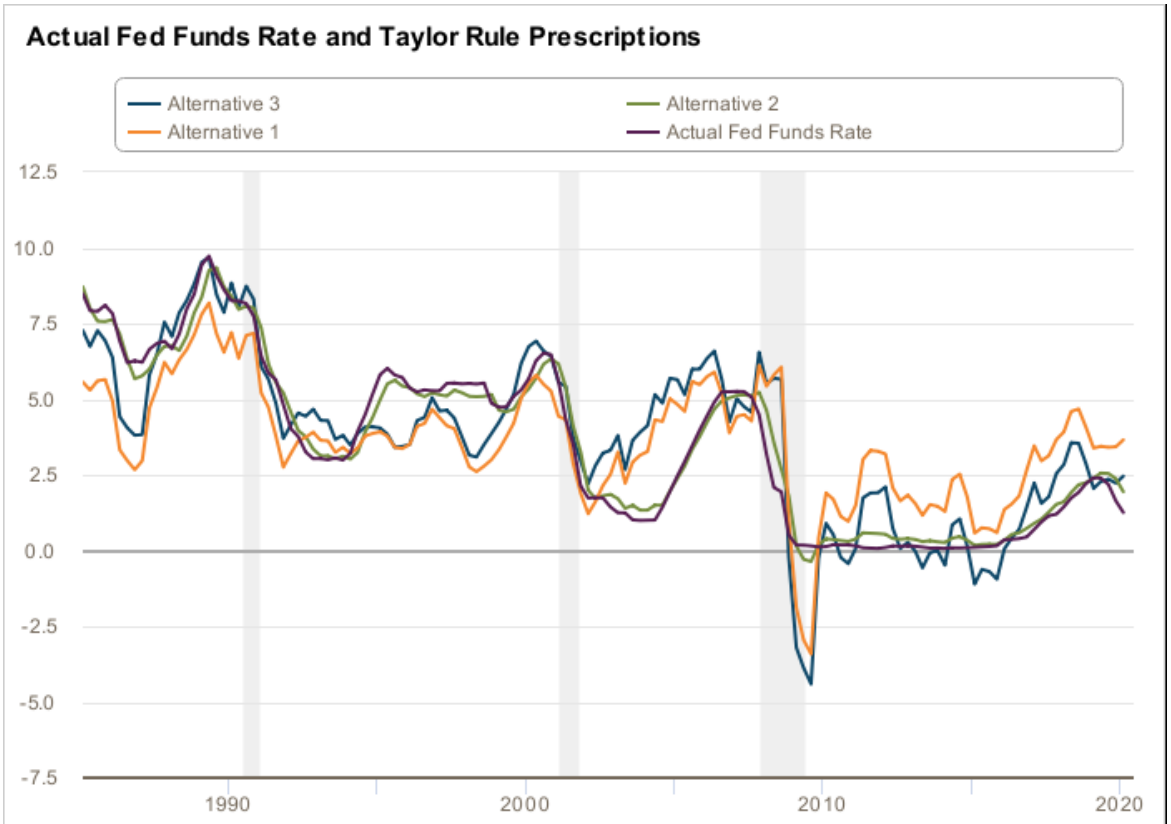

	Alternative 1	Alternative 2	Alternative 3
Inflation Target Measures:	2PercentInflation	2PercentInflation	2PercentInflation
Natural Real Interest Rate Measures:	TwoPercentNatural	TwoPercentNatural	LWRstar1side
Resource Gap Measures:	CBOGDPgap	CBOGDPgap	CBOGDPgap
Inflation Measures:	PCEInflation	PCEInflation	PCEInflation
Weight on Gap:	0.5	.5	0.5
Interest Rate Smoothing:	0	.85	0

Source: Atlanta Fed

FEDERAL RESERVE BANK of ATLANTA

Exported on: Sunday, April 12, 2020

- Alt 1: Eqn 27.11 except r* = 2%
- Alt 2:Eqn 27.11, but w/smoothing parameter = 0.85
- Alt 3: Eqn 27.11, except r* *estimated*

Notice that at certain points, during the Great Recession and 2015, implied rate under Alt 1 and Alt 3 was below 0%

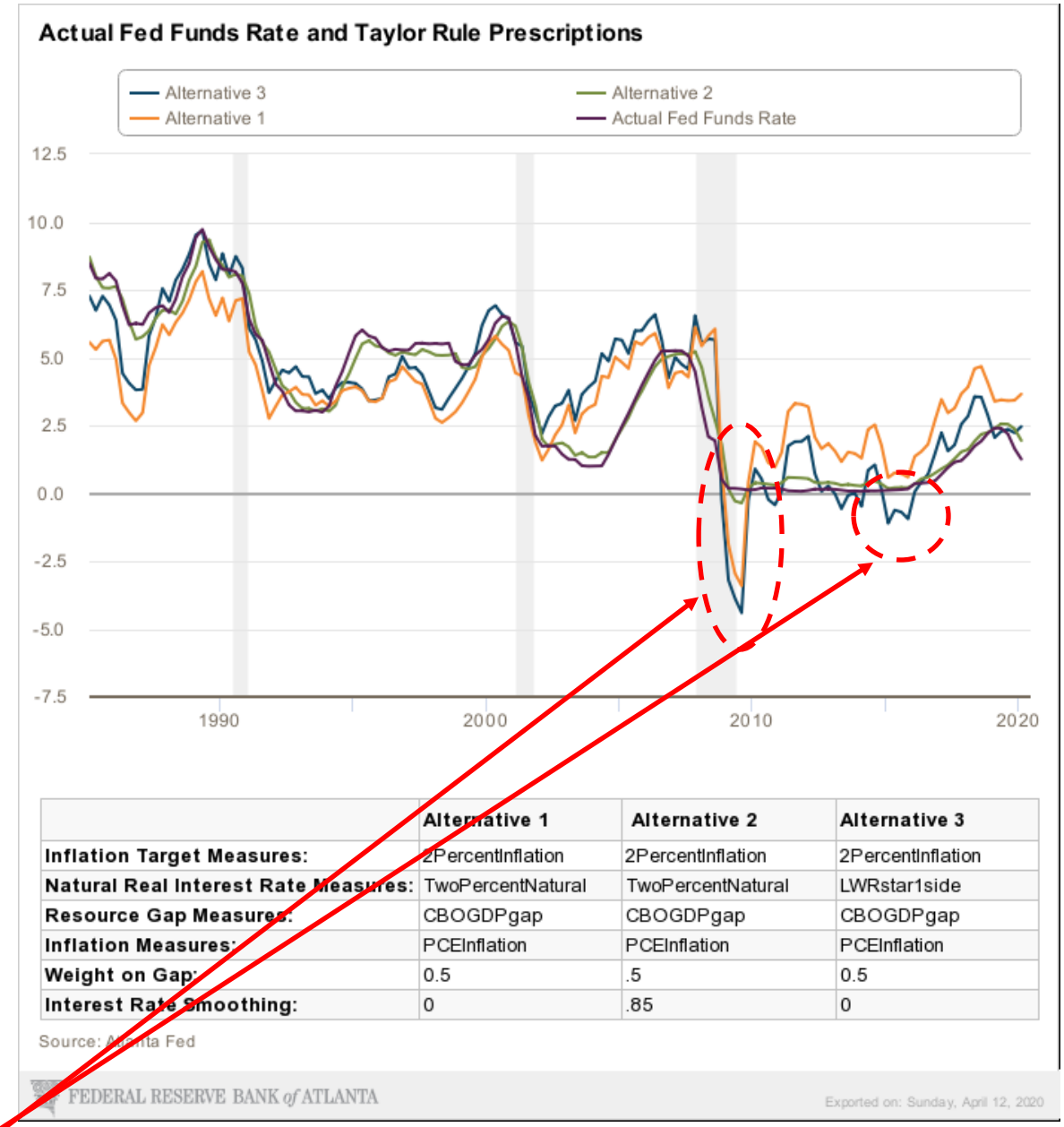

	Alternative 1	Alternative 2	Alternative 3
Inflation Target Measures:	2PercentInflation	2PercentInflation	2PercentInflation
Natural Real Interest Rate Measures:	TwoPercentNatural	TwoPercentNatural	LWRstar1side
Resource Gap Measures:	CBOGDPgap	CBOGDPgap	CBOGDPgap
Inflation Measures:	PCEInflation	PCEInflation	PCEInflation
Weight on Gap:	0.5	.5	0.5
Interest Rate Smoothing:	0	.85	0

Replacing LM with MP Curve

Appendix E

Monetary Policy Rule Closer to Reality

Modifications:

- Drop money supply, demand; money stock is now in background, and endogenous
- Rewrite AD, AS curves in terms of π rather than P
- Replace (27.11) with (E.1)

$$i_t = r^* + \pi^* + \phi_\pi(\pi_t - \pi^*) + \underbrace{\cancel{\phi_y}}_{=0}(Y_t - Y_t^f) \qquad (27.11)$$

Monetary Policy Rule Closer to Reality

Modifications:

- Drop money supply, demand; money stock is now in background, and endogenous
- Rewrite AD, AS curves in terms of π rather than P
- Replace (27.11) with (E.1)

$$i_t = r^* + \pi^* + \phi_\pi(\pi_t - \pi^*) + \underbrace{\cancel{\phi_y}}_{=0}(Y_t - Y_t^f) \qquad (27.11)$$

Monetary Policy Rule Closer to Reality

Modifications:

- Drop money supply, demand; money stock is now in background, and endogenous
- Rewrite AD, AS curves in terms of π rather than P
- Replace (27.11) with (E.1)

$$i_t = r^* + \pi^* + \phi_\pi(\pi_t - \pi^*) + \underbrace{\cancel{\phi_y}}_{=0}(Y_t - Y_t^f) \qquad (27.11)$$

$$i_t = r^* + \pi^* + \phi_\pi(\pi_t - \pi^*) + e_t \qquad (E.1)$$

Monetary Policy Rule Closer to Reality

$$i_t = r^* + \pi^* + \phi_\pi(\pi_t - \pi^*) + e_t \qquad \text{(E.1)}$$

- *e* has interpretation as exogenous shift term, but in policy rule
- Assume:

$$\phi_\pi > 1$$

$$r_t = i_t - \pi^e_{t+1}$$

$$\pi^e_{t+1} = \pi_t.$$

"Adaptive expectations"

Deriving MP Curve

$$i_t = r^* + \pi^* + \phi_\pi(\pi_t - \pi^*) + e_t \tag{E.1}$$

Subtract expected inflation from both sides (where expected inflation next period is this period's inflation, by adaptive expectations)

$$r_t = \underbrace{r^* + (1 - \phi_\pi)\pi^*} + (\phi_\pi - 1)\pi_t + \underbrace{e_t} \tag{E.2}$$

$$\bar{r}_t = r^* + (1 - \phi_\pi)\pi^* + e_t$$

Deriving the MP Curve

$$r_t = \bar{r}_t + (\phi_\pi - 1)\pi_t \tag{E.3}$$

$$\bar{r}_t = r^* + (1 - \phi_\pi)\pi^* + e_t$$

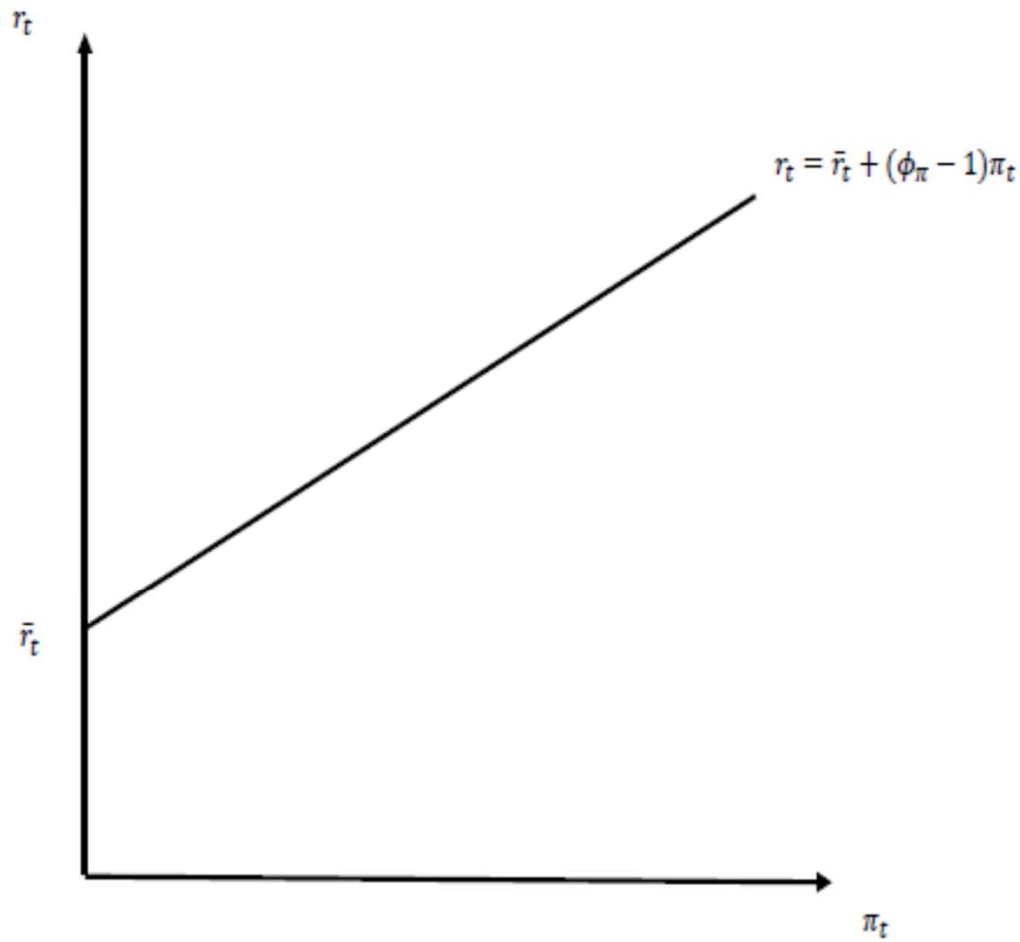

The Real & Financial/Monetary Sides

$$C_t = C^d(Y_t - G_t, Y_{t+1} - G_{t+1}, r_t) \tag{E.4}$$

$$I_t = I^d(r_t, A_{t+1}, K_t) \tag{E.5}$$

$$Y_t = C_t + I_t + G_t \tag{E.6}$$

IS curve

$$r_t = \bar{r}_t + (\phi_\pi - 1)\pi_t \tag{E.7}$$

MP curve

AD curve

Figure E.2: The AD Curve with the MP Curve: Derivation

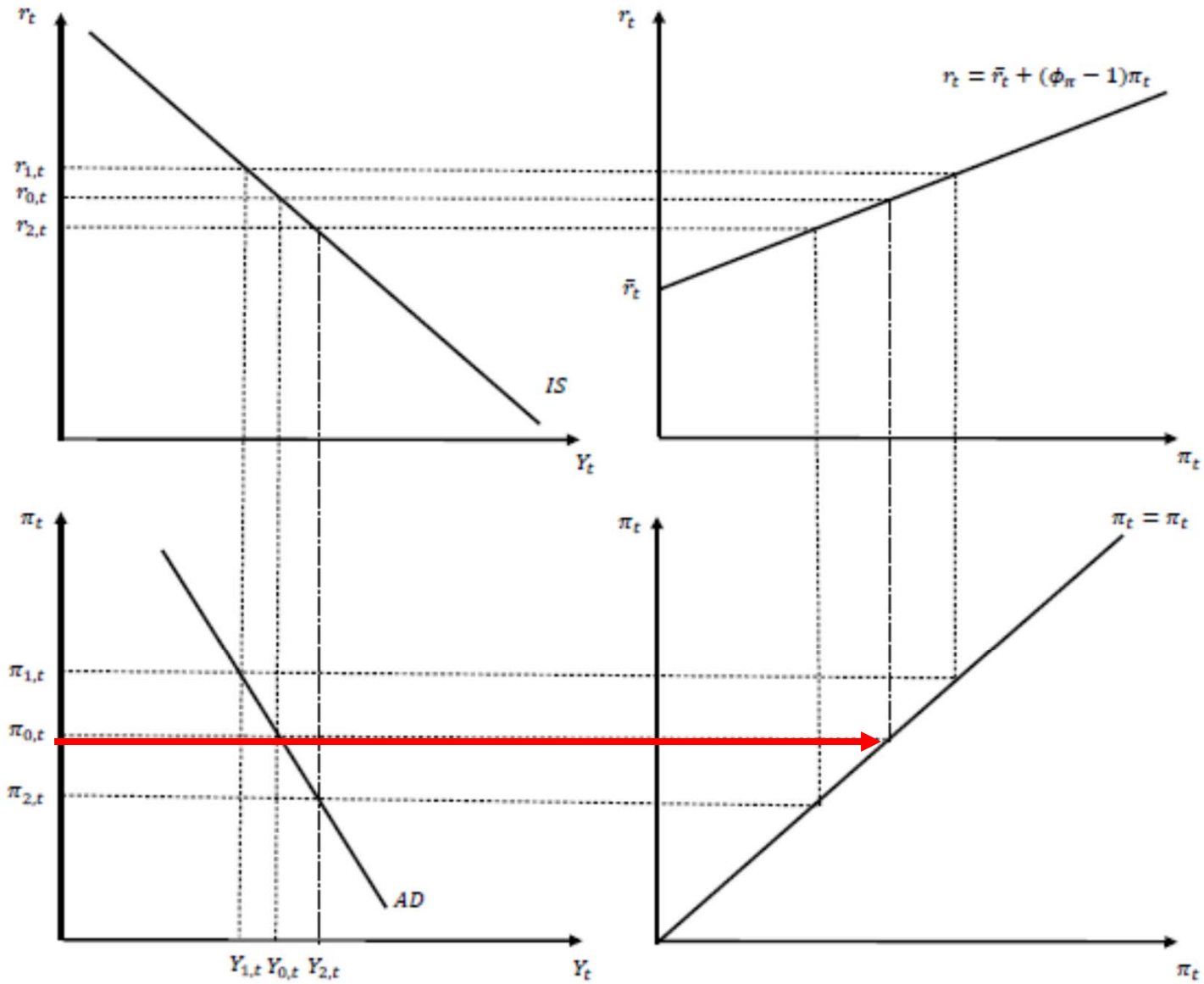

Figure E.2: The AD Curve with the MP Curve: Derivation

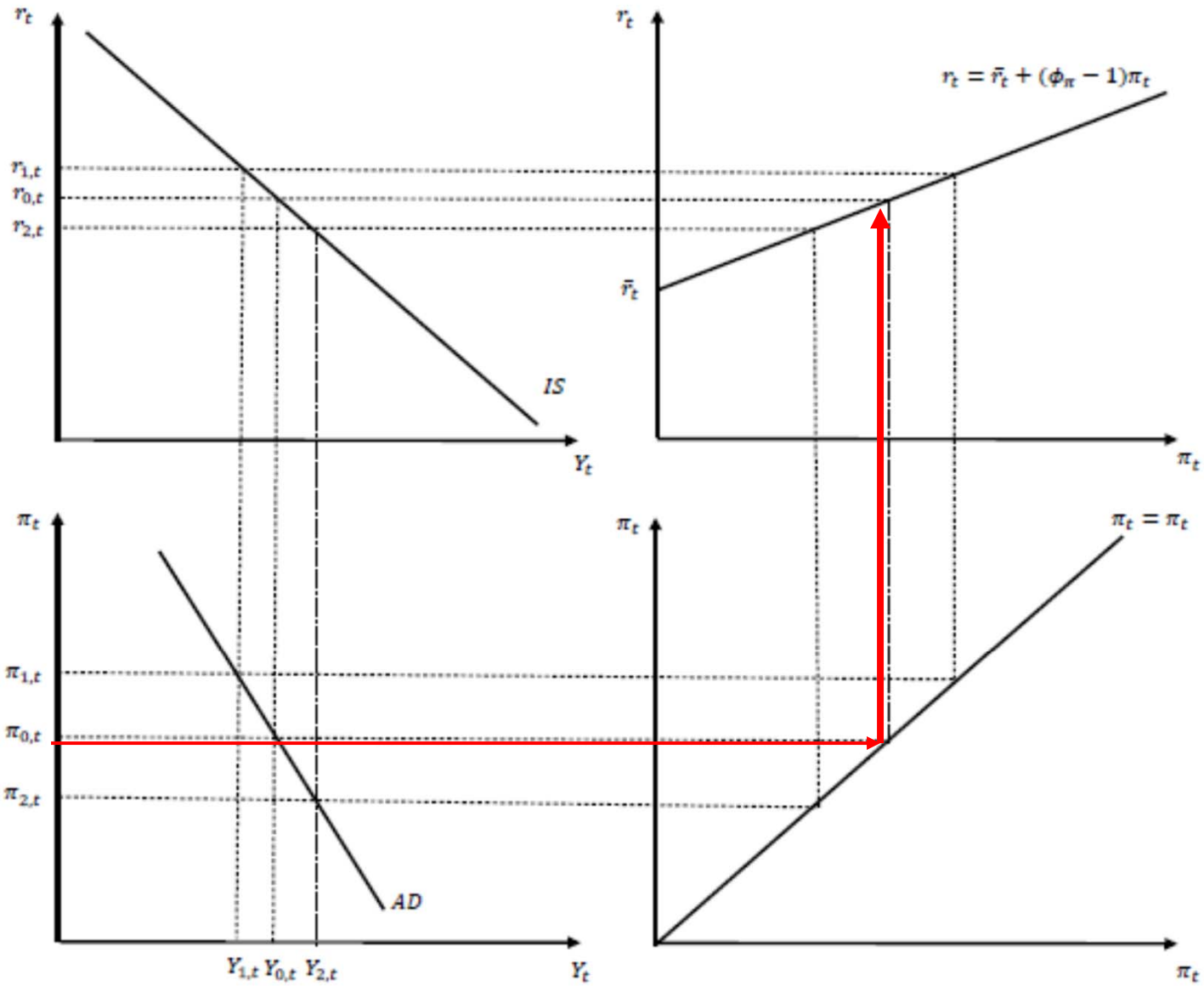

Figure E.2: The AD Curve with the MP Curve: Derivation

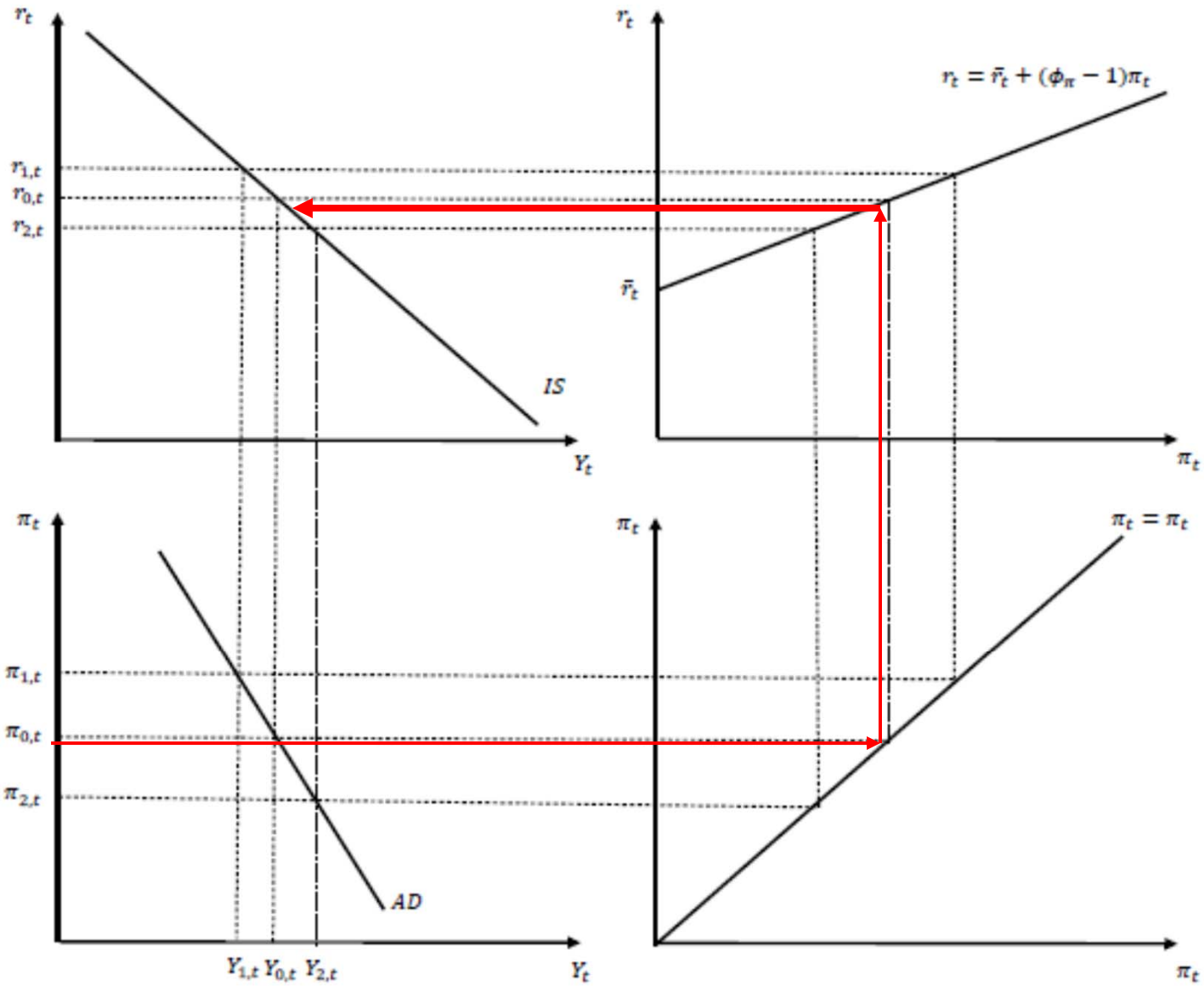

Figure E.2: The AD Curve with the MP Curve: Derivation

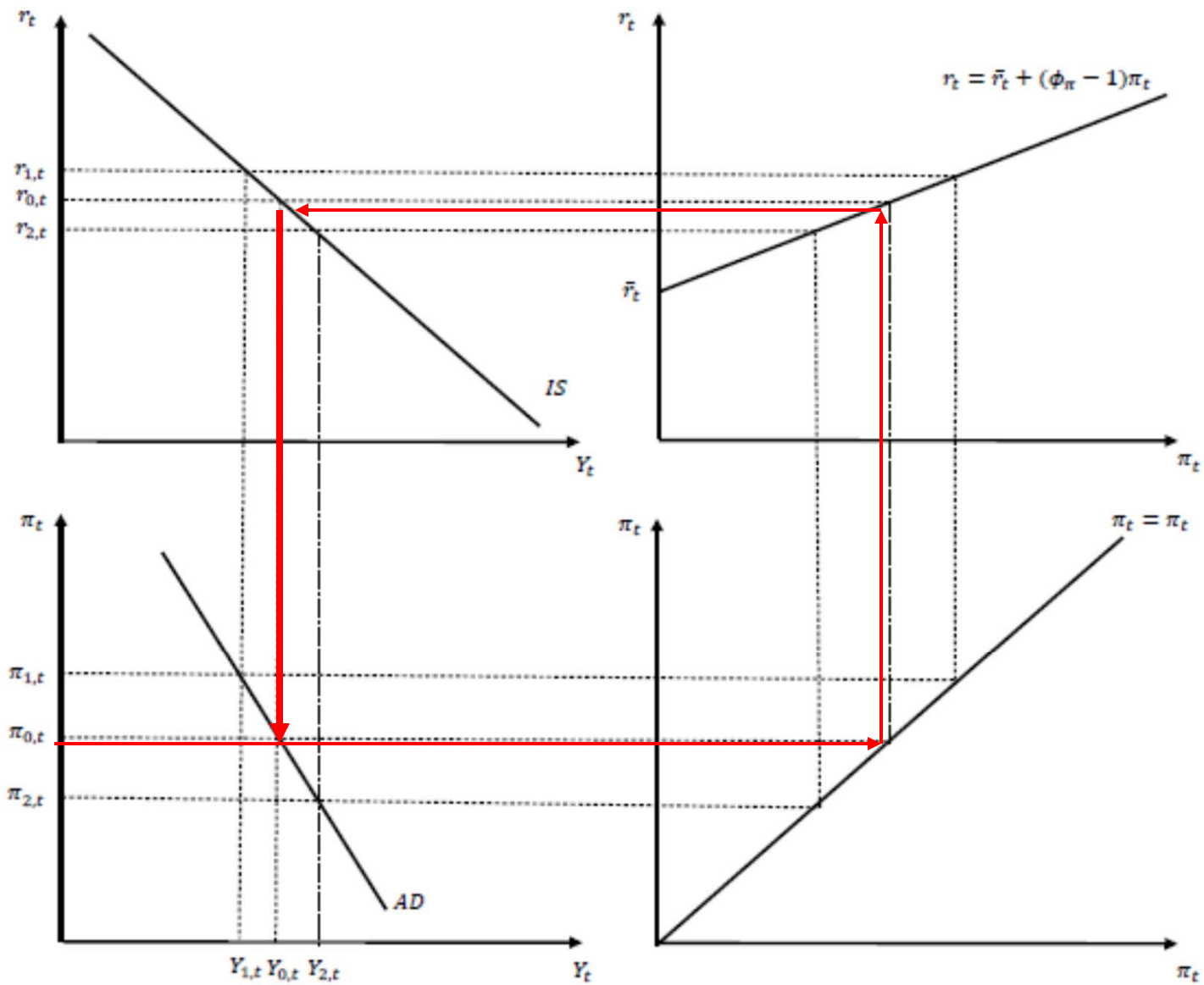

Note: this AD curve is slightly different from that in main textbook

Experiments

- IS shock
- Reduction in r-bar (maybe $r^* \downarrow$)
- Changes in weight on inflation gap, ϕ_π
- Supply shocks

Figure E.3: Shift of the AD Curve: Positive IS Shock

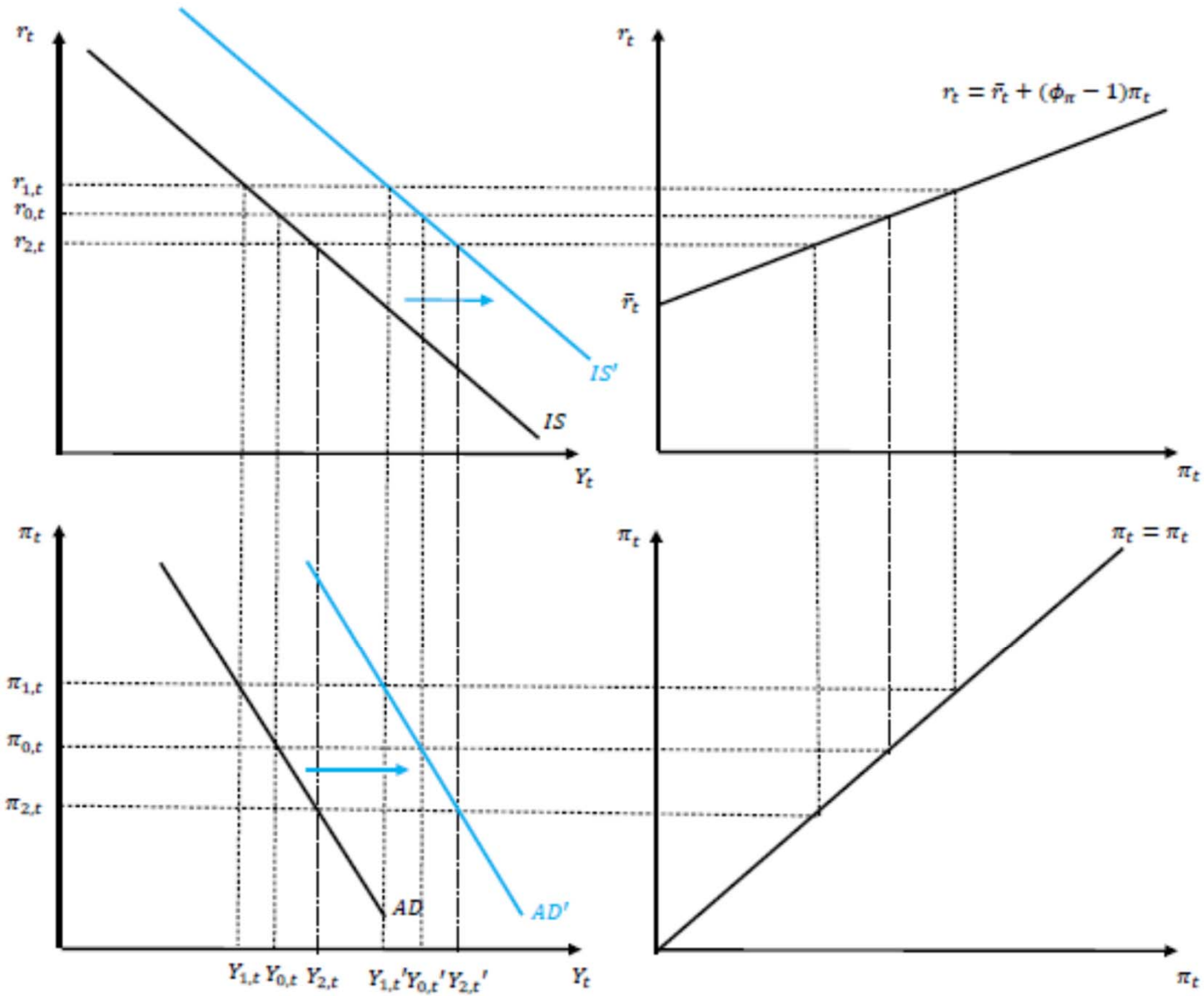

Figure E.4: Shift of the AD Curve: Reduction in $\bar{r}_t$

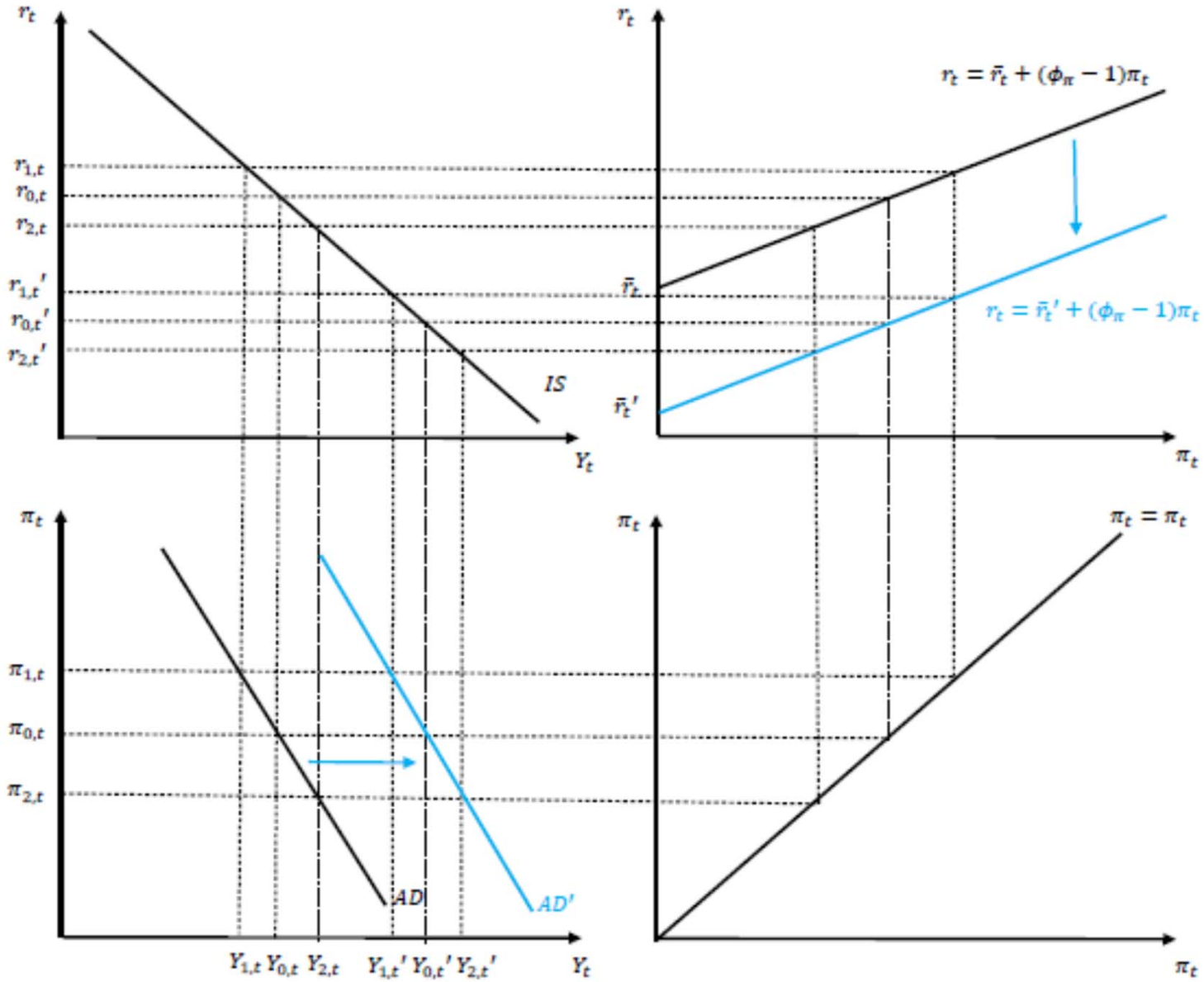

Figure E.5: The AD Curve with the MP Curve: Role of ϕ_π

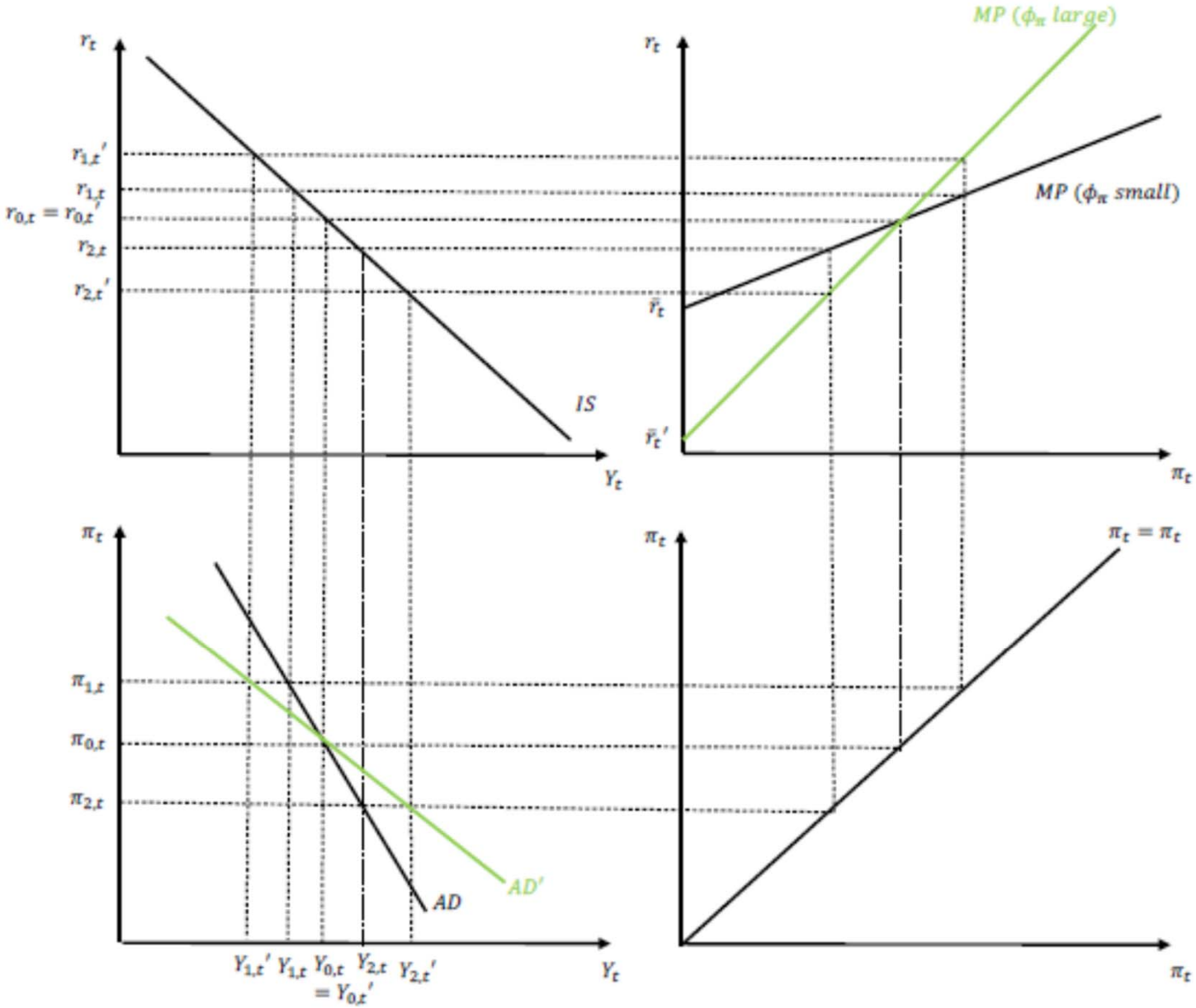

Supply Side and Entire Model

$$P_t = \bar{P}_t + \gamma(Y_t - Y_t^f) \qquad \text{(E.8)}$$

Subtract P_{t-1} from both sides, use approximation when P=1 $\quad P_t - P_{t-1} = \pi_t$

$$P_t - P_{t-1} = \bar{P}_t - P_{t-1} + \gamma(Y_t - Y_t^f) \qquad \text{(E.9)}$$

$$\pi_t = \pi_t^e + \gamma(Y_t - Y_t^f) \qquad \text{(E.10)}$$

Where $\quad \pi_t^e = \bar{P}_t - P_{t-1}$

Expectations Augmented Phillips Curve

$$\pi_t = \pi_t^e + \gamma(Y_t - Y_t^f) \qquad \text{(E.10)}$$

The rest of the supply side is essentially the same as before.

Figure E.6: Supply Side of the Model

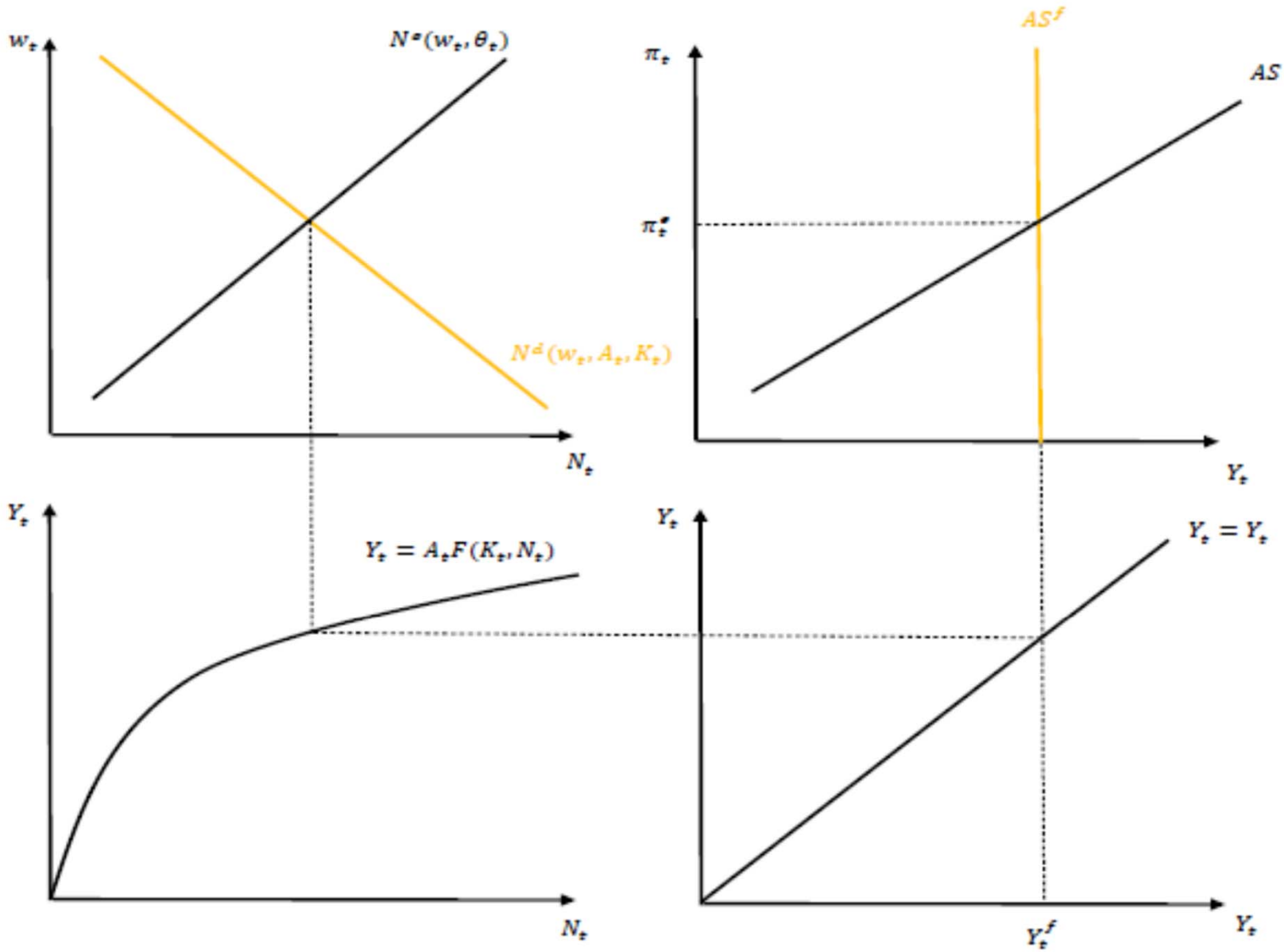

Full Model

$$C_t = C^d(Y_t - G_t, Y_{t+1} - G_{t+1}, r_t) \tag{E.16}$$

$$N_t = N^s(w_t, \theta_t) \tag{E.17}$$

$$\pi_t = \pi_t^e + \gamma(Y_t - Y_t^f) \tag{E.18}$$

Expected inflation equals change in p-bar over lagged price

$$I_t = I^d(r_t, A_{t+1}K_t) \tag{E.19}$$

$$Y_t = A_t F(K_t, N_t) \tag{E.20}$$

$$Y_t = C_t + I_t + G_t \tag{E.21}$$

$$\boxed{r_t = \bar{r}_t + (\phi_\pi - 1)\pi_t} \tag{E.22}$$

MP curve instead of LM curve

$$r_t = i_t - \pi_t \tag{E.23}$$

Adaptive expectations

Figure E.7: The IS-MP-AD-AS Equilibrium

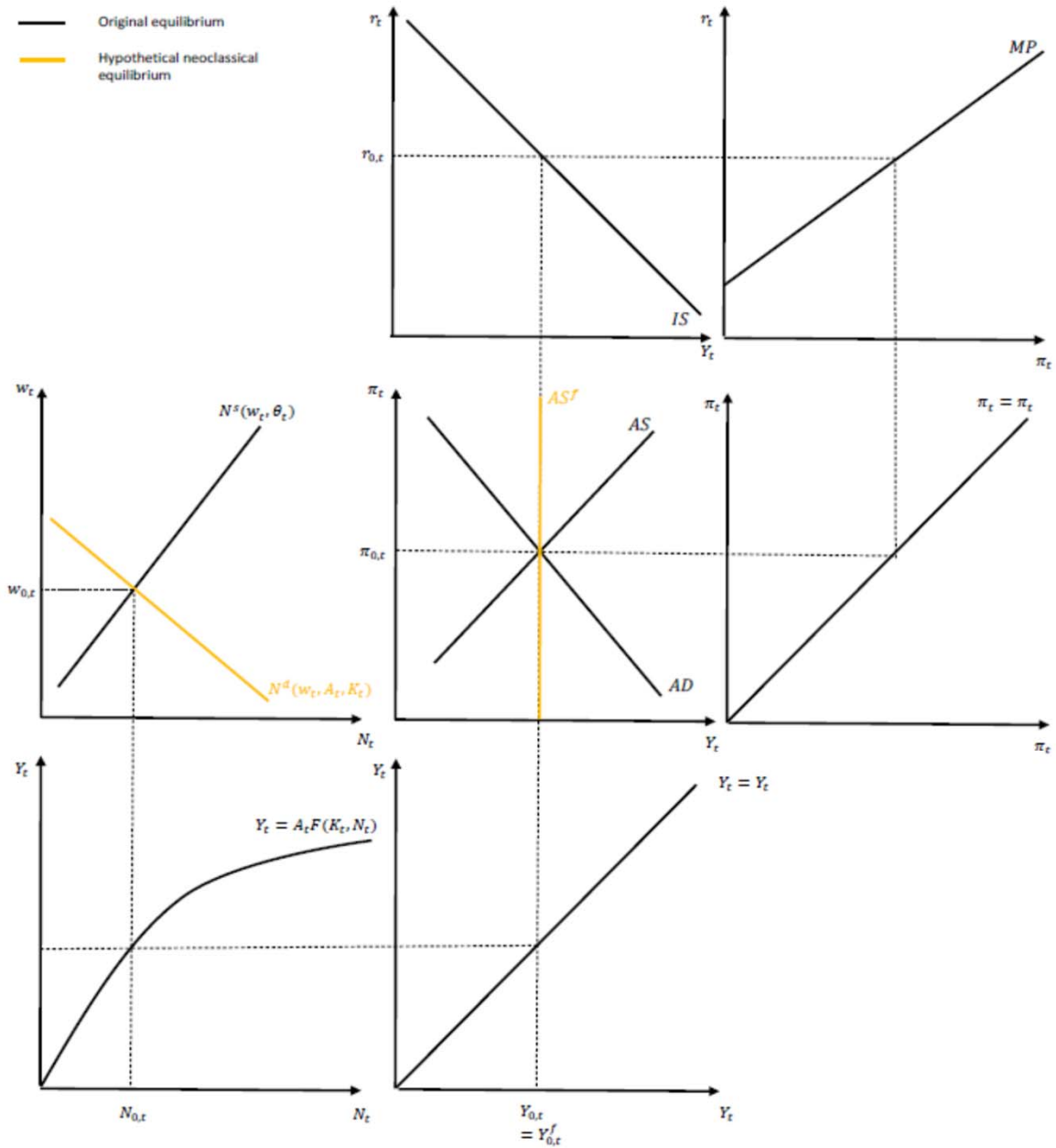

Experiments

- IS shock
- Increase in r-bar
- Supply shocks

Figure E.8: Positive IS Shock

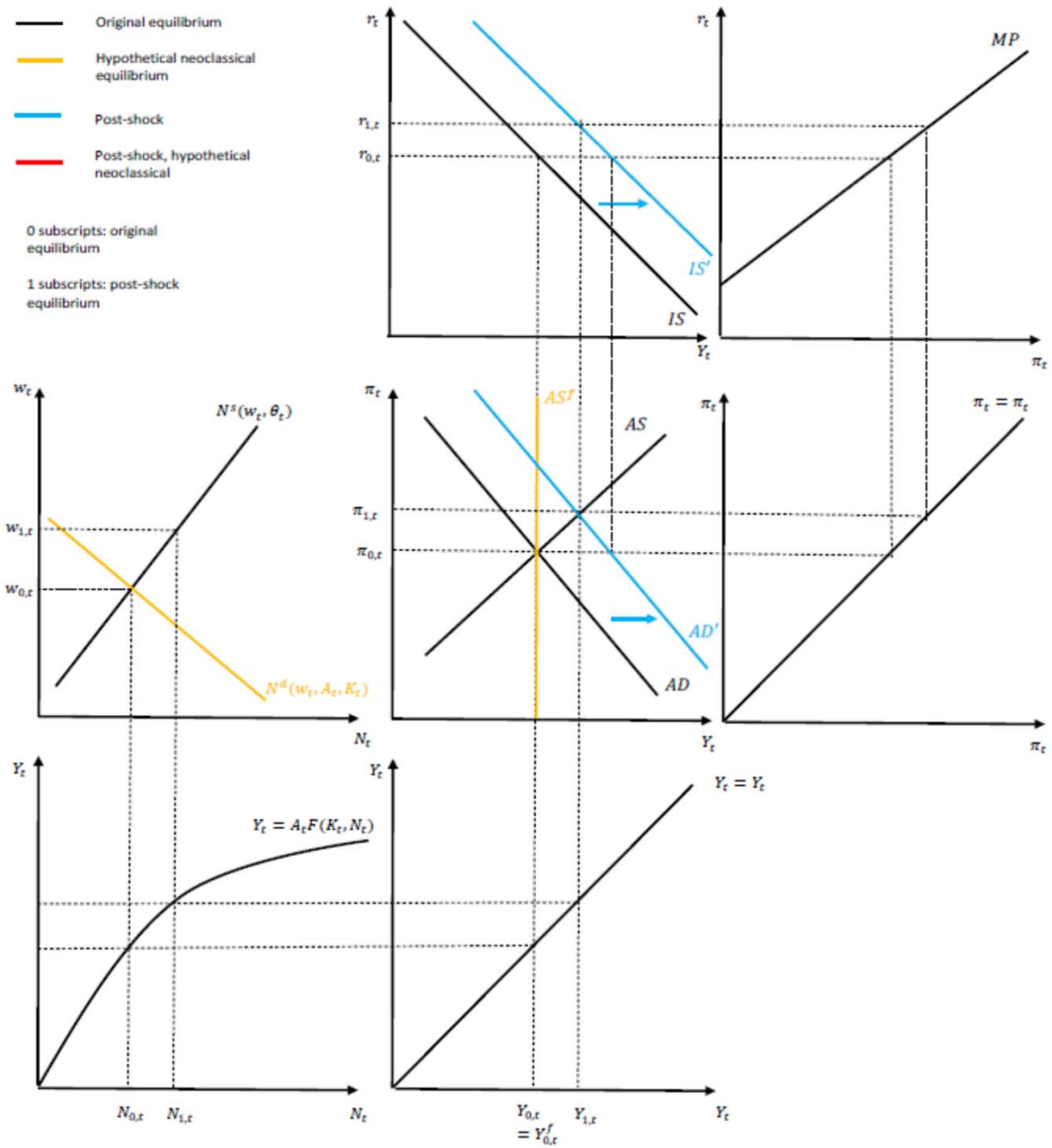

Figure E.9: Increase in $\bar{r}_t$

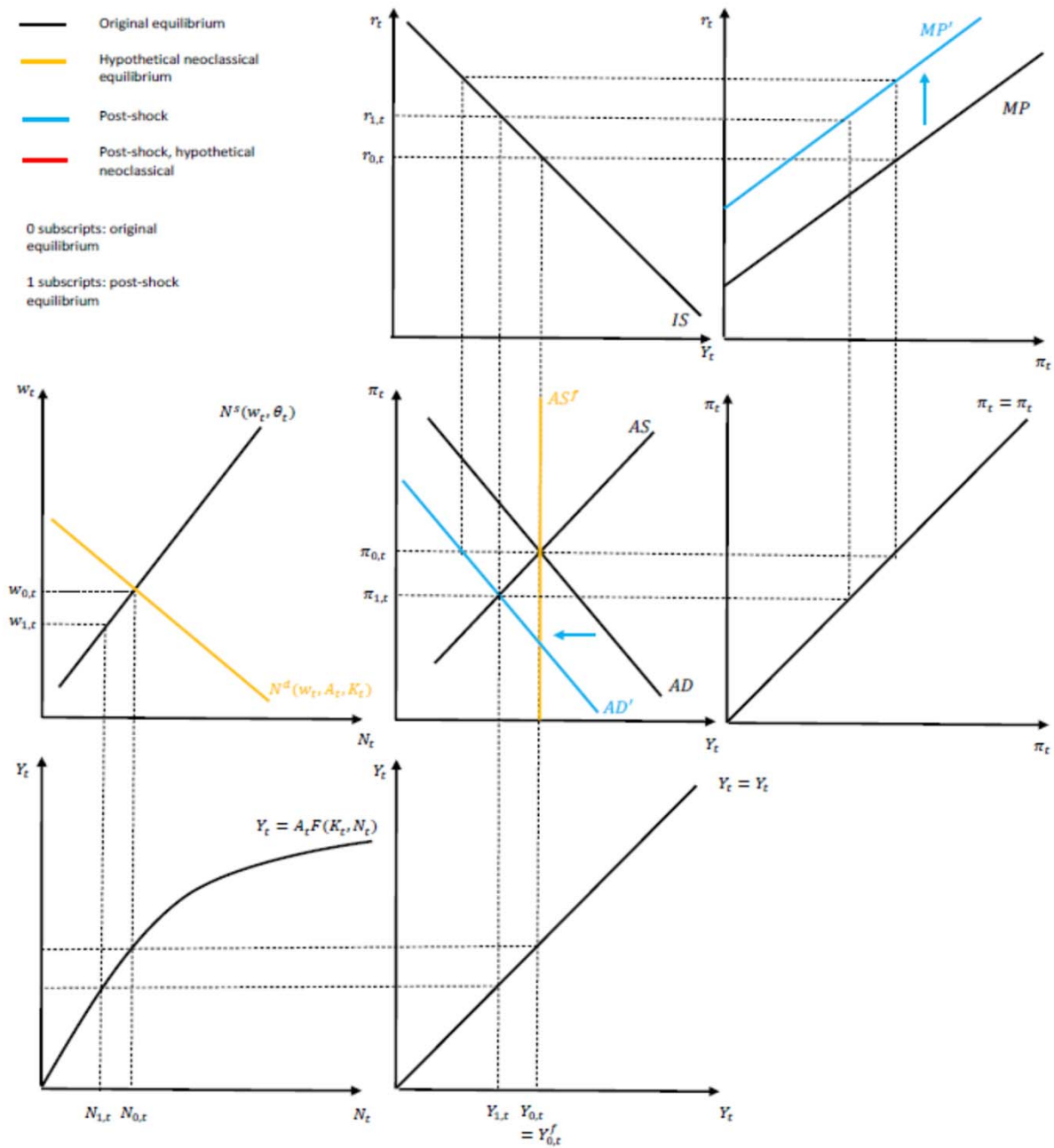

Figure E.10: Increase in A_t

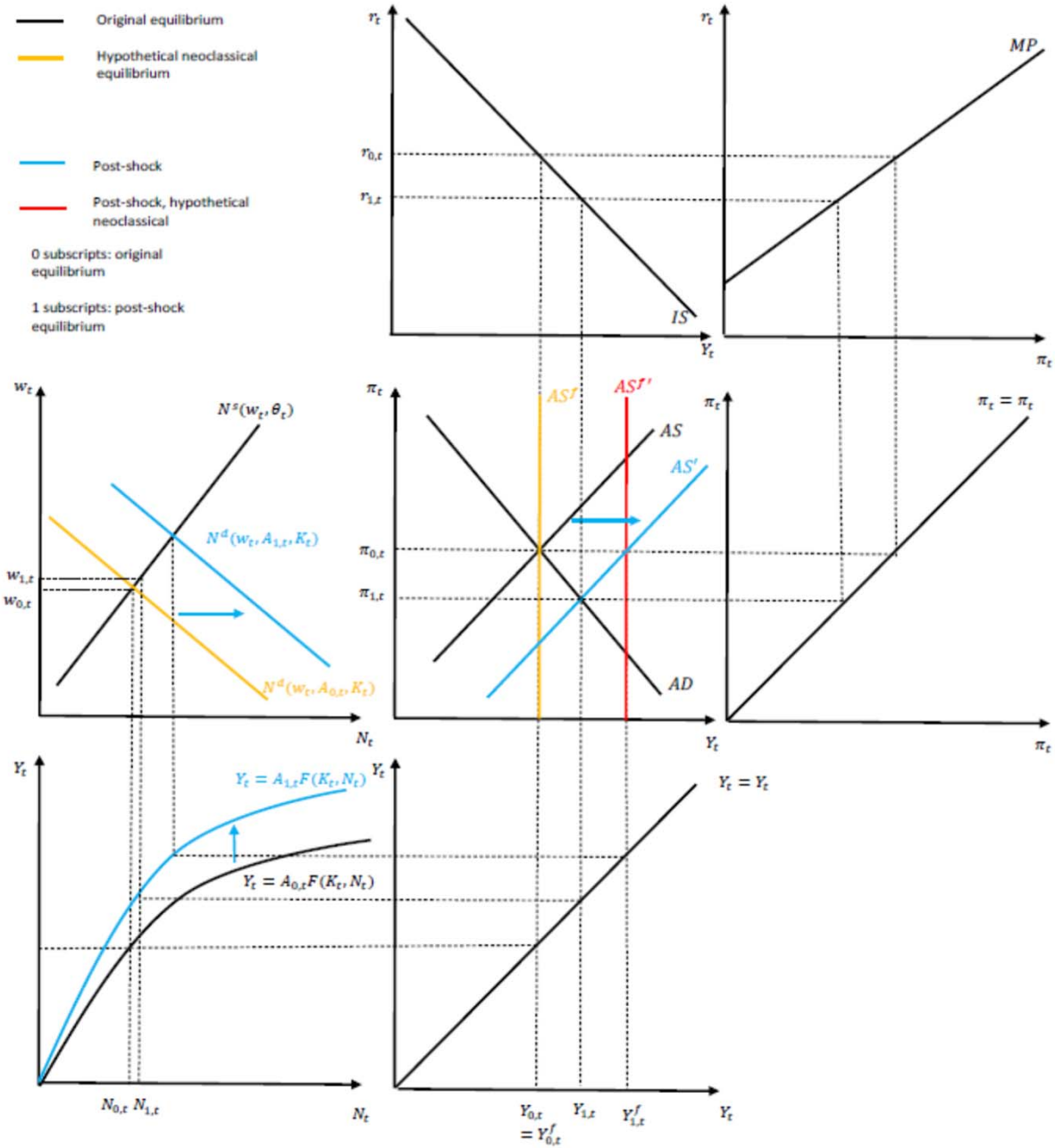

The Natural Rate

Empirics of Natural Rate

New Keynesian Interpretation

$$y_t = E_t y_{t+1} - \frac{1}{\alpha}[i_t - E_t \pi_{t+1} - r_t^n], \tag{3.8}$$

$$r_t^n \equiv \rho + \alpha E_t \Delta y_{t+1}^n = \text{natural rate of interest.} \tag{3.9}$$

Where consumption equals output, and

$$\rho = \delta - 0.5(\sigma_p^2 + \alpha^2 \sigma_c^2 + 2\alpha\sigma_{pc}). \tag{3.4}$$

Hamilton, et al. (2015)

Natural Rate-Growth Link Is Weak over Long Term

Exhibit 3.7. GDP growth versus *r*: 10-year backward moving averages, 1879-2014.

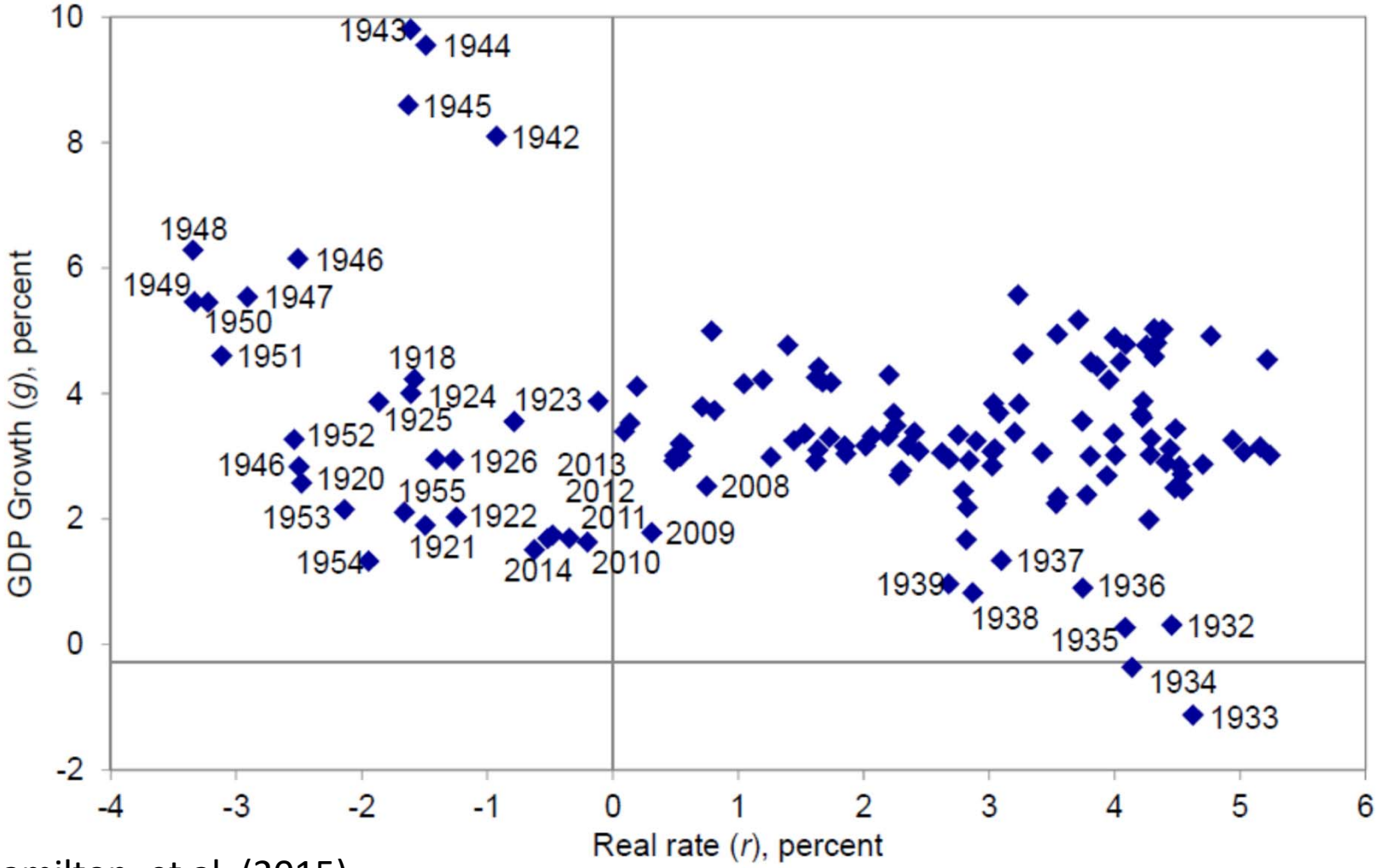

Hamilton, et al. (2015)

Natural Rate-Growth Link Is Weak Cross-country

Exhibit 3.9. Cross-country relations between GDP growth and *r* over selected samples.

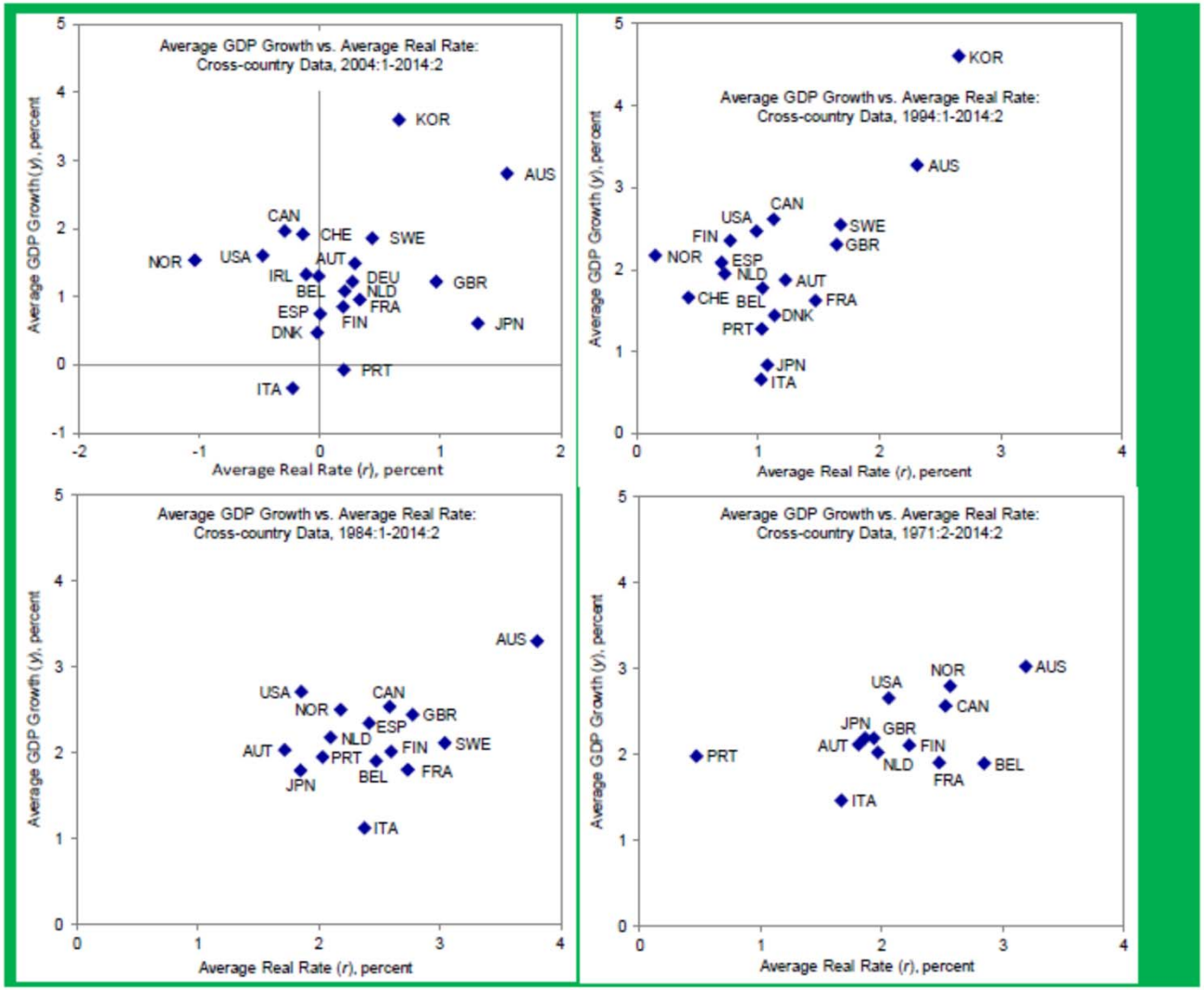

Hamilton, et al. (2015)

Holston-Laubach-Williams (JIE, 2017)

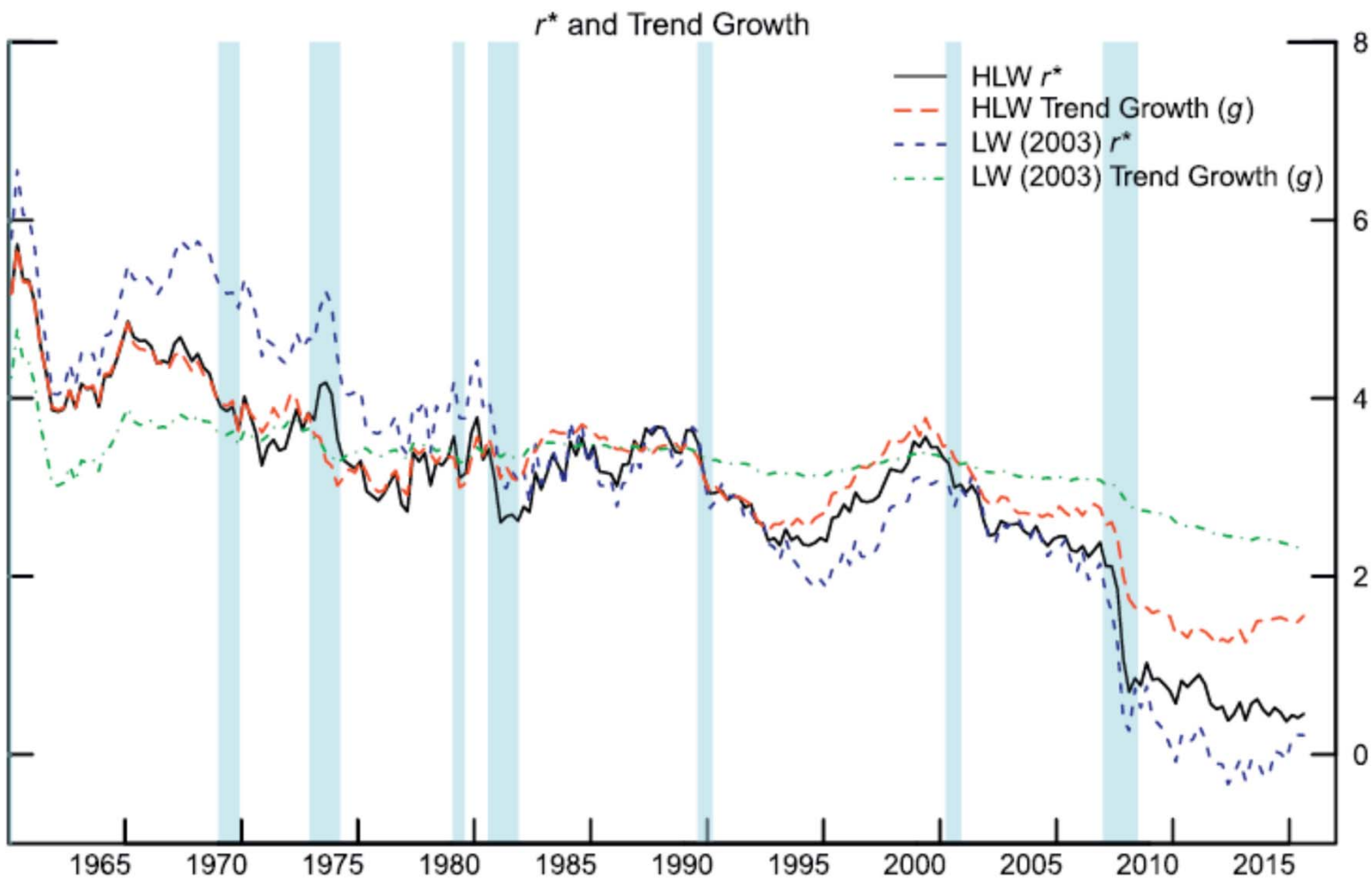

Fig. 10. Comparison of HLW and LW (2003) estimates.

Ad Hoc Empirical Approach

Exhibit 5.2. Long-run world real rate (ℓ_t, in blue) and U.S. ex-ante real rate ($r_{US,t}$, in black).

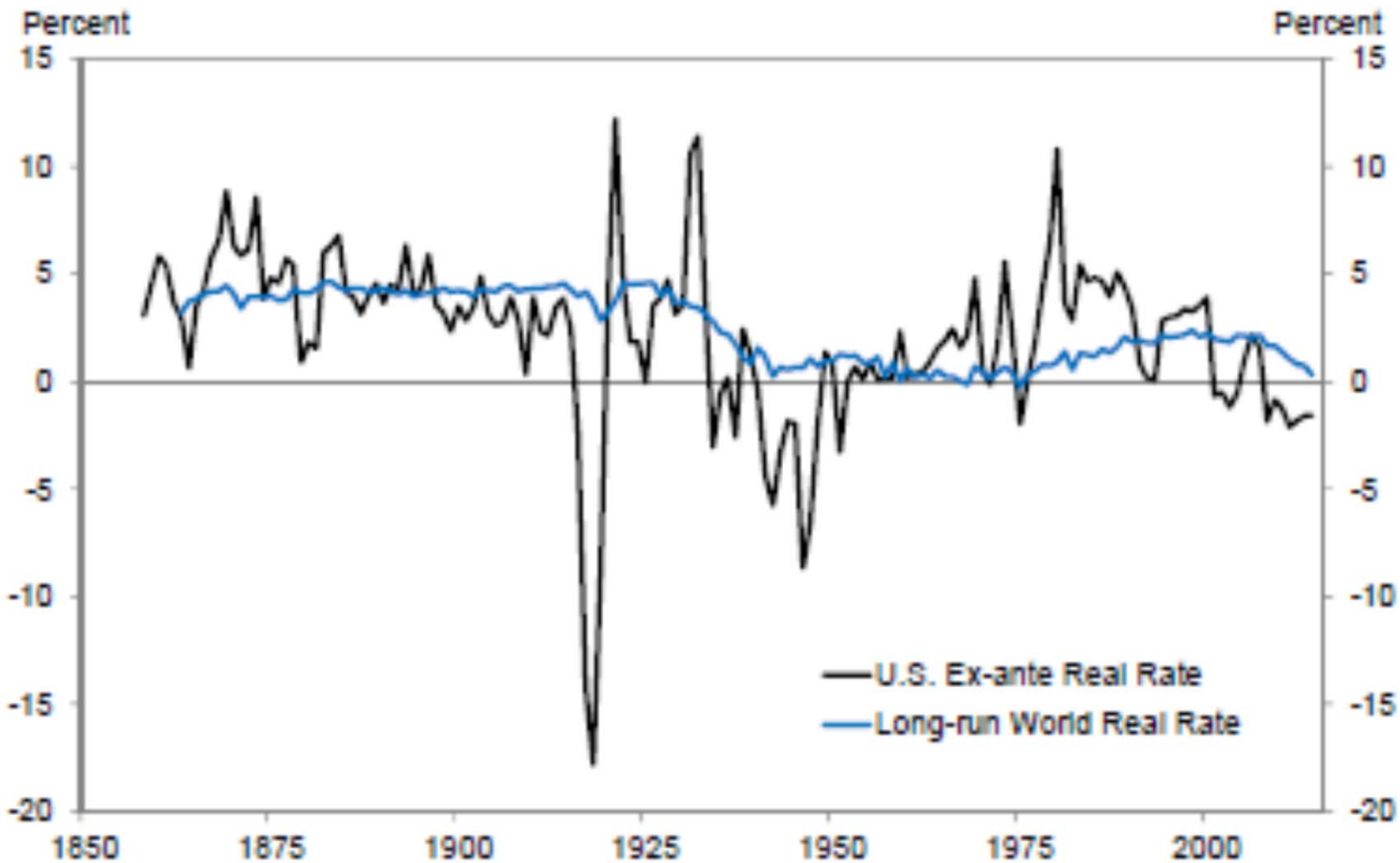

Hamilton, et al. (2015)

Summary

- The Natural Rate is key to implementing monetary policy
- Theory (New Keynesian) implies a strong relationship between natural rate and growth rate of potential output
- The relationship is not robust in the data, either over long spans or cross country
- Most methods agree that that the natural rate has fallen in recent years